Higher order bright solitons and shock signals in nonlinear transmission lines

E. Kengne[1, 2,*] C. Tadmon[2], T. Nguyen-Ba[1], and R. Vaillancourt[1]
[1]*Department of Mathematics and Statistic, University of Ottawa. 585 King Edward Avenue Ottawa, ON, K1N 6N5, Canada*
[2]*Department of Mathematics & Computer Sciences, Faculty of Science, University of Dschang. P.O. Box 067, Dschang, Republic of Cameroon*

(Dated: October 17, 2009)

We investigate bright solitons and shock wave signals in electrical transmission lines. Starting from the derivative cubic-quintic nonlinear Schrödinger equation, we use the modified Hirota's bilinear method to prove the existence of higher order bright soliton and shock signals in the lines.

On étudie les solitons brillants et les signaux onde de choc dans les lignes de transmission électriques non linéaires. À partir de l'équation de Schrödinger non-linéaire cubique-quintique contenant des dérivées dans les termes non-linéaires, on emploie la méthode bilinéaire d'Hirota pour démontrer l'existence de solitons brillants d'ordre supérieurs et d'ondes de choc dans les lignes

PACS numbers: 03.75.Gg, 03.75.Nt, 03.75.Hh, 02.60.Cb

Since the 1970s, various investigators have discovered the existence of solitons in nonlinear transmission lines (NLTLs), through both mathematical models and physical experiments (see for example Refs. [1–5]). Scott's classical monograph [6] was among the first to treat the physics of transmission lines. Scott showed that the Korteweg–deVries (KdV) equation describes weakly nonlinear waves in a nonlinear LC transmission line containing a finite number of cells which consist of two elements: a linear inductor in the series branch and a nonlinear capacitor in the shunt branch. If the nonlinearity is moved from the capacitor parallel to the shunt branch of the line to a capacitor parallel to the series branch, the nonlinear Schrödinger (NLS) equation is obtained instead [7].

Some years ago, the nonlinear propagation of signals in electrical transmission lines has been investigated, theoretically and experimentally [5, 8, 9]. It has been shown that the system of equations governing the physics of the considered network can be reduced to a NLS equation or a pair of coupled NLS equations. Both the single and the coupled NLS equations admit the formation of envelope solitons, which have been observed theoretically [10] and experimentally [8, 9].

Recently, we have presented a model for wave propagation on the discrete electrical transmission line of Fig. 1 based on the cubic-quintic nonlinear Schrödinger (CQNLS) equation with derivative in the cubic terms [11], derived in the small amplitude and long wavelength limit using the standard reductive perturbation technique and complex expansion [12] on the governing nonlinear equations. The modulational instability of partially coherent electrical pulses that are governed by this CQNLS equations has been analyzed [13].

In this letter, we study the propagation of the bright solitons and shock waves that are governed by the CQNLS

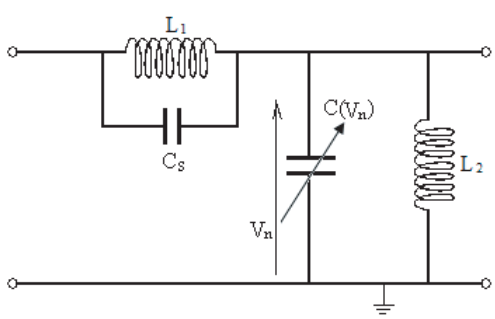

FIG. 1: One section of a discrete lossless dispersive nonlinear transmission line.

*Corresponding author's E-mail: ekengne6@yahoo.fr

equation [11]

$$i\frac{\partial\psi_1}{\partial t}=P\frac{\partial^2\psi_1}{\partial x^2}+\gamma\psi_1+Q_1\left|\psi_1\right|^4\psi_1+iQ_2\left|\psi_1\right|^2\frac{\partial\psi_1}{\partial x}+iQ_3\psi_1^2\frac{\partial\psi_1^*}{\partial x}, \tag{1}$$

where ψ_1^* is the complex conjugate of ψ_1, and P, γ, and Q_j, $j=1$, 2, and 3 are real transmission line parameters.

If we associate with Eq. (1) its complex conjugate, we obtain the following coupled equations for $\psi_1(x,t)$ and its conjugate ψ_1^* :

$$\begin{aligned} i\frac{\partial\psi_1}{\partial t} &= P\frac{\partial^2\psi_1}{\partial x^2}+\gamma\psi_1+Q_1\psi_1^3\psi_1^{*2}+iQ_2\psi_1\psi_1^*\frac{\partial\psi_1}{\partial x}+iQ_3\psi_1^2\frac{\partial\psi_1^*}{\partial x},\\ i\frac{\partial\psi_1^*}{\partial t} &= -P\frac{\partial^2\psi_1^*}{\partial x^2}-\gamma\psi_1^*-Q_1\psi_1^{*3}\psi_1^2+iQ_2\psi_1^*\psi_1\frac{\partial\psi_1^*}{\partial x}+iQ_3\psi_1^{*2}\frac{\partial\psi_1}{\partial x}, \end{aligned}$$

which can be written as follows, the complex conjugate of the complex amplitude ψ_1 and taking the complex conjugate of Eq. (1) yield

$$i\frac{\partial\psi_1}{\partial t}=P\frac{\partial^2\psi_1}{\partial x^2}+\gamma\psi_1+Q_1\psi_1^3\psi_2^2+iQ_2\psi_1\psi_2\frac{\partial\psi_1}{\partial x}+iQ_3\psi_1^2\frac{\partial\psi_2}{\partial x}, \tag{2}$$

$$i\frac{\partial\psi_2}{\partial t}=-P\frac{\partial^2\psi_2}{\partial x^2}-\gamma\psi_2-Q_1\psi_1^2\psi_2^3+iQ_2\psi_1\psi_2\frac{\partial\psi_2}{\partial x}+iQ_3\psi_2^2\frac{\partial\psi_1}{\partial x}, \tag{3}$$

where $\psi_2=\psi_1^*$. If we treat ψ_1 and ψ_2 as to be independent functions, then to obtain the soliton solutions and the shock wave solution, we introduce the following transformation [14, 15]

$$\psi_1=\frac{Ge^{i(Kx-\Omega t)}}{F^{\frac{1}{2}+i\alpha}},\qquad \psi_2=\frac{He^{-i(Kx-\Omega t)}}{F^{\frac{1}{2}-i\alpha}}, \tag{4}$$

where G and H are complex functions, F is a real function, and α is a real constant, and the modified bilinear operator defined by

$$D_{\alpha,t}^mD_{\alpha,x}^n=\left(\frac{\partial}{\partial t'}-\left(\frac{1}{2}+i\alpha\right)\frac{\partial}{\partial t}\right)^m\left(\frac{\partial}{\partial x'}-\left(\frac{1}{2}+i\alpha\right)\frac{\partial}{\partial x}\right)^nF(x,t)\,G(x',t')\Big|_{x'=x,t'=t}. \tag{5}$$

In the case of Eq. (1), we take $H=G^*$, which means, according to Eq. (4), that $\psi_2=\psi_1^*$. Substituting Eq. (4) into Eqs. (2) and (3), we obtain

$$\begin{aligned} &\Big\{iF\left(D_{\alpha,t}-i\Omega\right)-P\left[F\left(D_{\alpha,x}^2+iK\frac{\partial}{\partial x}\right)+\left(iKF-\left(\frac{3}{2}+i\alpha\right)\frac{\partial F}{\partial x}\right)\left(D_{\alpha,x}+iK\right)\right]\\ &-iQ_2GH\left(D_{\alpha,x}+iK\right)\Big\}FG=PF\left(\frac{3}{2}+i\alpha\right)D_{\alpha,x}F_xG+\gamma F^2G+Q_1G^3H^2+iQ_3G^2\left(D_{-\alpha,x}-iK\right)FH, \end{aligned} \tag{6}$$

$$\begin{aligned} &\Big\{iF\left(D_{-\alpha,t}+i\Omega\right)+P\left[F\left(D_{-\alpha,x}^2-iK\frac{\partial}{\partial x}\right)-\left(iKF+\left(\frac{3}{2}-i\alpha\right)\frac{\partial F}{\partial x}\right)\left(D_{-\alpha,x}-iK\right)\right]\\ &-iQ_2GH\left(D_{-\alpha,x}-iK\right)\Big\}FH=-PF\left(\frac{3}{2}-i\alpha\right)D_{-\alpha,x}F_xH-\gamma F^2H-Q_1G^2H^3+iQ_3H^2\left(D_{\alpha,x}+iK\right)FG. \end{aligned} \tag{7}$$

The exact solutions of Eqs. (6) and (7) can be obtained and may depend on the parameters K, Ω, and α, as well as on the expansion chosen for the dependent variable F, G, and H. Thus, expanding the dependent variables in terms of ϵ, the solutions can be constructed as usual. For the construction of solutions of Eq. (1) we take $H=G^*$.

To obtain possible bright soliton solutions of Eqs. (6) and (7), we set $K=\Omega=0$ and consider the expansion

$$G=\epsilon G_1,\quad H=\epsilon G_1^*,\quad F=1+\epsilon^2F_2. \tag{8}$$

The solutions are found to be

$$G_1=\exp(\theta),\ G_1^*=\exp(\theta^*),\ F_2=a\exp(\theta+\theta^*),\quad \theta=kx-\omega t, \tag{9}$$

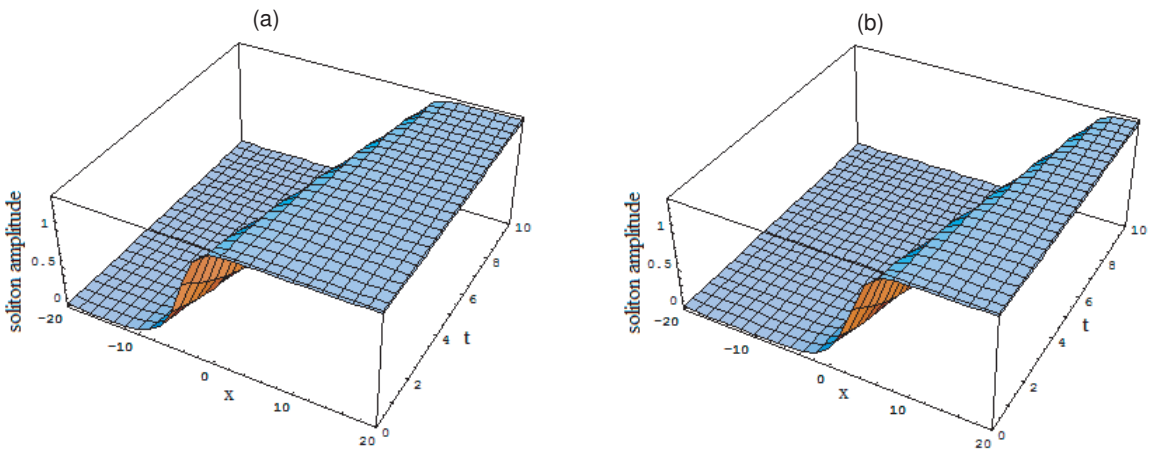

FIG. 2: (Color online) Plot of the amplitude of the soliton solution (11) for $\epsilon = 6$ (a) and $\epsilon = 0.3$ (b) with the the equation parameters $P = 0.9$, $Q_1 = -0.1$, $Q_2 = 2$, $Q_3 = 1.25$, and $\gamma = 0.08$.

with

$$k = \frac{1}{2} + i\frac{Pa}{Q_3 - Q_2},\ \omega = \frac{P^2 a}{Q_2 - Q_3} + i\frac{2\gamma + P}{2},\ \alpha = \frac{Q_2 + Q_3}{4Pa},\ a^2 = \frac{2Q_2Q_3 + 5Q_3^2 - 3Q_2^2 - 16PQ_1}{12P^2}, \tag{10}$$

under the conditions that $2Q_2Q_3 + 5Q_3^2 - 3Q_2^2 - 16PQ_1 > 0$ and $Q_3 - Q_2 \neq 0$. For $F(x,t)$ to be positive, we need only the positive value of a from Eq. (10). Using Eqs. (4), (8), and (9), we obtain the following solution of Eq. (1)

$$\psi_1(x,t) = \frac{\epsilon \exp(kx - \omega t)}{\left[1 + \epsilon^2 a \exp(2\mathrm{Re}(kx - \omega t))\right]^{\frac{1}{2} + i\alpha}}, \tag{11}$$

with a free parameter ϵ. The soliton solutions of form (11) were not obtained in Ref. [11]. Because the real parts of k and ω are different from zero, the amplitude $|\psi_1(x,t)|$ depends both on x and t. This amplitude is plotted on Fig. 2 as function of both x and t for $\epsilon = 6$ (a) and $\epsilon = 0.3$ (b) with the equation parameters $P = 0.8$, $Q_1 = -0.1$, $Q_2 = 2$, $Q_3 = 1.25$, and $\gamma = 0.08$.

The bright soliton solution (11) arises from a suitable compensation between the nonlinear and dispersive effects on the system. It can be used to ensure a wave propagation in all physical systems described by Eq. (1). Moreover, from the detailed investigations, we find that Eq. (1) possesses higher order bright soliton solutions.

For $K\Omega \neq 0$, we seek the shock wave solutions of Eqs. (6) and (7) in the form

$$G = \exp[i(Kx - \Omega t)],\ H = \exp[-i(Kx - \Omega t)],\ F = 1 + a\exp[-2\mu(x - \eta t)],\quad |\mu| + |\eta| > 0. \tag{12}$$

We then find

$$\begin{aligned} \eta &= 0,\ K = -\frac{(Q_2 + Q_3)}{2P},\ \Omega = \gamma + Q_1 - \frac{2Q_2Q_3 + 3Q_3^2 - Q_2^2}{4P},\ \alpha = \frac{Q_2 + Q_3}{4\mu P}, \\ \mu^2 &= \frac{2Q_2Q_3 + 3Q_3^2 - Q_2^2 - 4PQ_1}{4P^2}, \end{aligned} \tag{13}$$

under the condition that $2Q_2Q_3 + 3Q_3^2 - Q_2^2 - 4PQ_1 > 0$. Using Eqs. (4) and (12), we then obtain the following solution of Eq. (1)

$$\psi_1(x,t) = \frac{\exp[2i(Kx - \Omega t)]}{(1 + a\exp(-2\mu x))^{\frac{1}{2} + i\alpha}}, \tag{14}$$

where a is an arbitrary positive constant and K, Ω, μ, and α are defined by Eq. (13). Because K and Ω are real numbers, the amplitude $|\psi_1(x,t)| = (1 + a\exp(-2\mu x))^{-\frac{1}{2}}$ depends only on the space variable x. The plot of this amplitude is shown on Fig. 3 for $a = 0.005$ (a) and $a = 2$ (b) with the equation parameters $P = 2$, $Q_1 = -0.1$, $Q_2 = 2$, $Q_3 = 1.25$, and $\gamma = 0.08$.

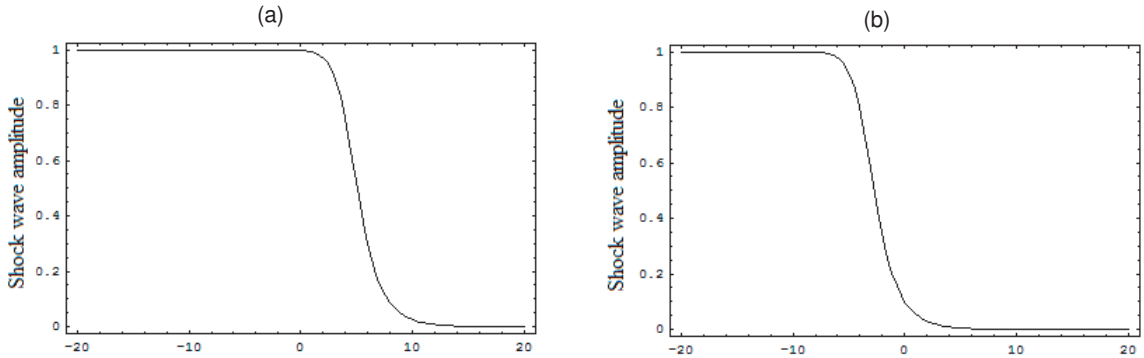

FIG. 3: Plot of the amplitude of the shock wave solution (13) for $a = 0.005$ (a) and $a = 2$ (b) with the equation parameters $P = 2$, $Q_1 = -0.1$, $Q_2 = 2$, $Q_3 = 1.25$, and $\gamma = 0.08$.

The shock wave solution (14) is generally a consequence of an overall balance among nonlinear and dispersive effects in the system when the former are greater than the latter. This new solution of Eq. (1) can be used to describe pattern formation and to study spatiotemporal transitions from coherent structures to chaotic states in the networks of Fig. 1 modelled by Eq. (1).

In this letter, we have shown that Hirota's bilinear method is one of the alternative formalism to the Painlevé singularity structure analysis to build the soliton and shock wave solutions of single nonlinear Schrödinger equations with quintic nonlinearities and with derivatives in the cubic terms. This analysis is found to be relatively simple when compared with the Painlevé analysis. One advantage of this method is that one can, in a simple manner, construct the soliton solutions for a cubic-quintic nonlinear Schrödinger equations with derivatives in the cubic terms. It will be interesting to investigate numerically and/or analytically the linear (in)stability of the solutions. Work is in progress in this direction.

Acknowledgments

The first author thanks the Department of Mathematics and Statistic of the University of Ottawa, where this work was done. This research was partially supported by the Programme "Soutien et renforcement de l'excellence universitaire" de l'Agence Universitaire de la Francophonie, projets "Professeurs-chercheurs invités du Sud", the Natural Sciences and Engineering Research Council of Canada and the Centre de recherche mathématiques of the Université de Montréal.

[1] T.C. Kofane, B. Michaux, and M. Remoissenet, J. Phys. C: Solid State Phys. **21**, 1395 (1988).
[2] P. Marquié, J.M. Bilbault, and M. Remoissenet, Phys. Rev. E **51**, 6127 (1995).
[3] H. Nagashima and H. Amagishi, J. Phys. Soc. Japan **47**, 2021 (1979).
[4] M.S. Ody, A.K. Common, and M.Y. Sobhy, Eur. J. Appl. Math. **10**, 265 (1999).
[5] E. Kengne, B.A. Malomed, S.T. Chui, and W.M. Liu, J. Math. Phys. **48**, 013508 (2007).
[6] A.C. Scott, Active and Nonlinear Wave Propagation in Electronics (Wiley, NewYork, 1970).
[7] V. Nejoh, J. Phys. A **20**, 1733 (1987).
[8] P. Marquié, J. M. Bilbault, and M. Remoissenet, Phys. Rev. E **49**,828 (1994).
[9] J.M. Bilbault, P. Marquié, and B. Michaux, Phys. Rev. E **51**, 817 (1995).
[10] E. Kengne, V. Bozic, M. Viana, and R. Vaillancourt, Phys. Rev. E **78**, 026603 (2008).
[11] E. Kengne and W.M. Liu, Phys. Rev. E **73**, 026603 (2006).
[12] T. Tanuiti and N. Yajima, J. Math. Phys. **10**, 1369 (1969).
[13] M. Marklund and P.K. Shukla, Phys. Rev. E **73**, 057601 (2006).
[14] R. Hirota, J. Math. Phys. **14**, 805 (1978).
[15] E. Yomba and T.C. Kofané, J. Phys. Soc. Japan **69**, 1027 (2000).